ENVIRONMENTAL CONSULTANTS

Date: April 2026
Contract Ref: 3528

BS5837:2012 ARBORICULTURAL SURVEY & IMPACT ASSESSMENT (AIA)

HADSCAL LAND, BRECON ROAD, HAY-ON-WYE, HEREFORD, HR3 5DY
for
HADSCAL

Focus Environmental Consultants
Unit 2
Ball Mill Top Business Park
Worcester
WR2 6PD
Email: quotes@focus-enviro.com
Tel. 01905 780700

© Focus Environmental Consultants / HADSCAL

CONTROL SHEET

HADSCAL

HADSCAL Land, Brecon Rd, Hay-on-Wye, Hereford, HR3 5DY

BS5837:2012 Arboricultural Survey & Impact Assessment (AIA)

	Name	Position
Surveyor(s)	Edward Cleverdon BSc (Hons) MArborA	Senior Arboriculturalist
Author	Edward Cleverdon BSc (Hons) MArborA	Senior Arboriculturalist
Checked by	Fern Fellowes-Day	Director

Contract No.	Project Contact	Revision No.	Date of Issue
3528	Edward Cleverdon	01	01 April 2026
3528	Edward Cleverdon	02	27 October 2026

Disclaimer

Focus Environmental Consultants® is the trading name of Focus Ecology Limited. Please Note that all reasonable care and attention is made by Focus Environmental Consultants to produce reports and advice to a high, professional standard. However, no responsibility is accepted for any consequences howsoever caused, by the release of this report to third-parties. Focus Environmental Consultants operates a bespoke Quality Assurance System in order to maintain the high standards of report writing that our clients and peers expect. Completed reports are appraised using a detailed Quality Assurance Checklist focussing not just on grammar and formatting but also sense and scientific argument before they are issued. The reports of all staff are quality-assessed on a prescribed, regular basis to ensure that these high standards are maintained.

Template Version: V3 (January 2020).

ENVIRONMENTAL CONSULTANTS

TABLE OF CONTENTS

CONTROL SHEET 1
1. INTRODUCTION 3
1.1 Overview & Client Brief 3
1.2 Personnel & Quality Assurance 3
1.3 Site Location 3
1.4 Planning Policy & Guidance 4
1.5 Development Proposals 4
1.6 Assessment Method 4
2. RESULTS 5
2.1 Tree Preservation Orders & Conservation Areas 5
2.2 Site Description 5
2.3 Site Geology 8
2.4 Tree Stock 8
3. ARBORICULTURAL IMPACT ASSESSMENT (AIA) 9
3.1 Development Proposals 9
3.2 Tree Removal 9
3.3 Below Ground Conflicts 10
3.4 Above Ground Conflicts 11
3.5 Indirect Impacts of Development 12
4. DISCUSSION & RECOMMENDATIONS 13
4.1 Protection Measures 13
4.2 Mitigation Planting 13
4.3 Tree Management 13
4.4 Additional Tree Management Permissions 13
5. ANNEXES 15
5.1 Tree Survey Schedule 16
5.2 Tree Survey Key 27
5.3 Plans 29
5.4 BS5837:2012 Cascade Chart for Tree Quality Assessment 33
5.5 Tree Protection Measures & Signage 34
5.6 Scope & Limitations 37
5.7 Survey Methods 38
5.8 Legislation, Planning Policy and Guidance 39
5.9 References & Bibliography 41
6. QUALIFICATIONS & EXPERIENCE 42

1. INTRODUCTION

1.1 Overview & Client Brief

Focus Environmental Consultants was commissioned by HADSCAL (Hay & District Sports and Community Association Limited) to undertake an Arboricultural Survey and Impact Assessment (AIA) at HADSCAL Land, Brecon Road in accordance with BS5837:2012 - *Trees in Relation to Design, Demolition and Construction*.

The following documents were supplied by the client:

- Topographical Survey
- Site layout proposal

1.2 Personnel & Quality Assurance

The site was surveyed by an experienced arboricultural consultant (Edward Cleverdon BSc (Hons) MArborA) from Focus Environmental Consultants on 19 March 2026.

1.3 Site Location

The site is located adjacent to HADSCAL Land, Brecon Rd, Hay-on-Wye, Hereford, HR3 5DY. The site is centred on Ordnance Survey grid reference SO 22851 41853.



Figure 1: Location Plan, with approximate red-line survey boundary.

1.4 Planning Policy & Guidance

This report has been produced in accordance with the recommendations of British Standard 5837:2012 - *Trees in Relation to Design, Demolition and Construction*.

Trees are a material consideration in the UK planning system. This report provides an assessment to help facilitate the correct application of the Town and Country Planning Act 1990 (sections 197 and following).

1.5 Development Proposals

It is understood that the development proposals are for the construction of multi-purpose sports and community facilities along with business units, a community growing area, updated access and extensive new landscaping.

1.6 Assessment Method

Trees, groups and hedgerows onsite or immediately adjacent to the site have been assessed for their quality and value. This has been done according to the BS5837:2012 categorisation method (Annex 5.4).

The position of each tree, group and hedgerow with retention category, canopy spread, root protection area (RPA) is shown on the Tree Survey Plan (Annex 5.3).

Category ‘A’ and ‘B’ trees are usually considered to provide an important contribution to the landscape and should be retained as part of the proposed development, wherever possible. Category ‘C’ trees are not usually considered to be a constraint to the development. Category ‘U’ trees have been assessed as having a very limited future contribution due to their poor structural and/or physiological condition.

2. RESULTS

2.1 Tree Preservation Orders & Conservation Areas

A check has been made on the Local Planning Authority interactive map to determine if any of the trees included in the survey are covered by a Conservation Area or protected by a Tree Preservation Order (TPO). The check, completed on 31 March 2026, confirmed that the site is not within a Conservation Area nor are the trees protected by a TPO. The site is within the Brecon Beacons National Park, however.

2.2 Site Description

The area for proposed development is located within open fields to the east of the football club which does not appear to be under current management or regular use. The site contains mature goat willow trees T1 – T4 within the centre, on the corner of the football club, with coppiced hazel and hawthorn trees located along the southern boundary, within and located just north of the boundary hedge line. To the west there are a small number self-seeded and pollarded hedgerow trees of limited value.



Plate 1: goat willow trees T1 – T4.



Plate 2: coppiced southern boundary trees.



Plate 3: eastern corner including silver birch tree T18.



Plate 4: eastern corner including silver birch tree T20.



Plate 5: self-seeded and pollarded hedgerow trees T24 – T29.

2.3 Site Geology

2.3.1 Data Search

Geology of Britain viewer (GoBV) has been used to check the prevailing soil type in the area (http://mapapps.bgs.ac.uk/geologyofbritain3d/index.html?).

2.3.2 Bedrock

The underlying bedrock consists of Moor Cliffs Formation, siltstone and mudstone interbedded with superficial deposits of diamicton. The presence of clay is not specifically recorded and the liability of the soil to seasonal movement is unknown.

2.4 Tree Stock

The tree stock recorded within and immediately surrounding the site is made-up of 23 trees, 4 groups and 3 hedgerows. All items were recorded as Category 'C'.

A categorised summary of the existing trees, groups and hedgerows situated on, and immediately adjacent to the site has been provided in accordance to BS5837:2012 (Table 1). The details of all surveyed trees, groups and hedgerows are listed in the Tree Survey Schedule (Annex 5.1).

Table 1: summary of tree stock with reference to BS5837:2012 retention categories.

	Total	A	B	C	U
Trees	23	0	0	23	0
Groups	4	0	0	4	0
Hedgerows	3	0	0	3	0
Totals	30	0	0	30	0

3. ARBORICULTURAL IMPACT ASSESSMENT (AIA)

3.1 Development Proposals

The following assessment only considers the impact of these proposals upon the surveyed trees, groups and hedgerows. This is with regard to the direct or indirect impacts of the proposals, including assessment of above and below ground constraints. The assessment is based on the surveyor's findings and drawings provided by the client's architect.

This section of the report should be read in conjunction with the plans found at Annex 5.3.

3.2 Tree Removal

The proposed development will require the removal of six trees (T1 – 4, T23 and T24) and the partial removal of two groups (G16 and G17).

This includes the goat willow trees within the centre of the site which while providing a small focal landscape feature and some historical context due to their age, are reaching the end of their useful life expectancies and are prone to structural collapse.

The removal of vegetation within the boundary group G17 will require the clearance of goat willow, by majority, which will open-up the site to views from the road. However, sections of the group may be retained either side of the entrance along with the more significant silver birch trees T18 and T20.

The reduction of scrub group G16 to allow for construction of the play space and installation of new landscape planting will not have an impact on the landscape amenity benefits of the site. Nor will the removal of the small, pollarded goat willow and field maple trees T23 and T24 to the west of the site.

The majority of informal scrub hedgerow H19 will be removed to facilitate new footpath and access behind the business units, and T7, T8, G9 and T10 will be removed / coppiced back into the hedgerow to facilitate proposed construction in that location.

The proposed development includes provision for extensive new planting which will mitigate for the proposed loss and significantly increase both canopy cover and species diversity on the site.



Figure 2: extract from the Tree Removal Plan, with proposed removals shaded grey.

3.3 Below Ground Conflicts

3.3.1 Root Protection Area Breaches

There are no significant RPA breaches associated with the development. Care will need to be taken when constructing the business unit closest to T18 within the eastern corner of the site. However, this may be managed by laying ground protection in the form of track mats between the building edge and the tree protective fence line to allow sufficient pedestrian room for access during the works. Please see the Tree Protection Plan at Annex 5.2 for further details.

3.3.2 Underground Utilities & Services

Detailed underground utility and service drawings have not yet been finalised. However, it is not anticipated that the installation of new underground services or soak-

a-ways will be required within the tree RPAs. There is ample room within the centre of the site and access roads.

3.4 Above Ground Conflicts

There are no significant conflicts between the proposed development and crown/ branches of retained trees/ vegetation, and the expected future growth and mature size of the retained vegetation is also not considered to cause any conflicts with the future use of the buildings.

Minor branch tip pruning and crown lifting may be required in the future to manage T18 of the adjacent business unit, however the tree already has a raised canopy form owing to the existing ground vegetation and is unlikely to have any significant conflict with building.



Figure 3: extract from the extract from the Tree Protection Plan.

3.5 Indirect Impacts of Development

3.5.1 Vegetation-Related Subsidence

The initial GoBV information suggests the presence of shrinkable clay-based soils onsite is unknown (Section 2.3). The precise soil type can only be confirmed with further soil investigation/analysis.

If shrinkable clay-based soils are confirmed, the design and size of foundations proposed to be built within the vicinity of trees may need to be considered in line with NHBC Standards - *Chapter 4.2 'Building near trees'.* Structures built on shrinkable clay-based soils, within the proximity of trees and on inadequate foundations, could be left at risk from tree-related subsidence damage.

4. DISCUSSION & RECOMMENDATIONS

4.1 Protection Measures

A Tree Protection Plan has been provided to indicate where tree protection fencing and ground protection should be installed to safeguard the trees highlighted for retention (Annex 5.3).

4.2 Mitigation Planting

The proposed development provides opportunities for replacement planting and there is adequate space within central areas of the site to significantly enhance the landscape setting of the site and provide long-term amenity benefits to the surrounding areas. At present the proposed layout includes the location of 200 indicative trees within a formally landscaped setting.

Further details could be provided through a carefully developed planting scheme, which would greatly benefit the amenity values of the area long into the future. Such a scheme needs to be followed up with good quality planting and aftercare in accordance with BS 8545:2014 – *Trees: from nursery to independence in the landscape*, to ensure the trees have the best opportunity to successfully establish and thrive.

4.3 Tree Management

Any recommended management works to trees that currently pose a risk to people and/or property have been highlighted within the observations/recommendations section of the Tree Survey Schedule (Annex 5.1) in bold font.

Any necessary tree removal and pruning works should be carried out in accordance with BS3998:2010 – *Recommendations for Tree Work*.

4.4 Additional Tree Management Permissions

4.4.1 Nesting Birds

Where the removal or pruning of trees, removal of potential bird nesting habitat should be undertaken outside the bird nesting season (March – August inclusive) or otherwise

under the direct supervision of a suitably qualified ecologist who will be able to identify nesting birds and advise of appropriate safe working distances.

5. ANNEXES

5.1 Tree Survey Schedule

5.2 Tree Survey Key

5.3 Plans

5.4 BS5837:2012 Cascade Chart for Tree Quality Assessment

5.5 Tree Protection Measures & Signage

5.6 Scope & Limitations

5.7 Survey Methods

5.8 Legislation, Planning Policy & Guidance

5.9 References & Bibliography

5.1 Tree Survey Schedule

3528-PD-10-Tree schedule (BS5837)

HADSCAL

Tree ID	No.	Species	Height (m)	Stem diameter (cm)	No. of Stems	CROWN SPREAD (m) N	NE	E	SE	S	SW	W	NW	Crown clearance (m)	L.B. (m)	Life stage	Condition Notes	Survey date	RPA (m^2)	RPR (m)	Life expectancy (yrs)	BS Category
Tree T1	1	Salix caprea (Goat Willow/Great Sallow)	12.0	55 COM	3		9.0		6.0		1.77		6.3	1.0		Mature	Structural condition Fair. Physiological condition Fair. Competition - Adjacent trees. Coppice stool - Coppice origin / Mature stems. Suppressed crown - Major. Unbalanced crown - Major.	19/03/2026	138.1	6.6	10-20	C1
Tree T2	1	Salix caprea (Goat Willow/Great Sallow)	14.0	72	1		6.0		6.0		4.0		6.3	1.0		Mature	Structural condition Fair. Physiological condition Fair. Competition - Adjacent trees. Coppice stool - Coppice origin / Mature stems. Suppressed crown - Minor. Unbalanced crown - Minor. DBH estimated, average of stems.	19/03/2026	234.5	8.6	10-20	C1
Tree T3	1	Salix caprea (Goat Willow/Great Sallow)	16.0	80	1		4.92		6.0		5.61		6.3	1.0		Mature	Structural condition Fair. Physiological condition Fair. Competition - Adjacent trees. Coppice stool - Coppice origin / Mature stems. Suppressed crown - Minor. Unbalanced crown - Minor. DBH estimated, average of stems. Higher value Category C tree, reduced due to species and likely life expectancy.	19/03/2026	289.5	9.6	10-20	C1
Tree T4	1	Salix caprea (Goat Willow/Great Sallow)	11.0	55 COM	3		1.0		5.0		5.0		5.0	1.0		Mature	Structural condition Fair. Physiological condition Fair. Competition - Adjacent trees. Coppice stool - Coppice origin / Mature stems. Suppressed crown - Major. Unbalanced crown - Major. Dimensions estimated due to inaccessibility.	19/03/2026	138.1	6.6	10-20	C1
Tree T5	1	Betula pendula (Silver Birch)	4.0	7	1	1.0		1.0		1.0		1.0		0.0		Semi Mature	Structural condition Fair. Physiological condition Fair. Location estimated, not plotted on topographical survey.	19/03/2026	2.2	0.8	10-20	C2

Stem **green** Estimated value
Stem **AVE** Average stem diameter for tree groups
Stem **COM** Combined stem diameter in accordance with BS5837
L.B. Height of lowest branch attachment (m) - where relevant

The survey information in this schedule has been gathered following a BS5837 survey for planning purposes. Where hazardous trees have been noted recommendations for works may have been made but this survey cannot be relied upon as a full health and safety assessment of the trees.

Generated By MyTREES tree management software

Tree ID	No.	Species	Height (m)	Stem diameter (cm)	No. of Stems	CROWN SPREAD (m) N	NE	E	SE	S	SW	W	NW	Crown clearance (m)	L.B. (m)	Life stage	Condition Notes	Survey date	RPA (m^2)	RPR (m)	Life expectancy (yrs)	BS Category
Tree T6	1	Corylus avellana (Common Hazel)	6.0	28	1		3.0		3.5		4.5		5.19	0.0		Early Mature	Structural condition Fair. Physiological condition Fair. Coppice stool - Regrown. DBH estimated, average of stems. Dimensions estimated due to inaccessibility. Emergent hedgerow tree. Location estimated, not plotted on topographical survey.	19/03/2026	35.5	3.4	10-20	C2
Tree T7	1	Sambucus nigra (Elder)	6.0	28	1		4.40		3.5		3.40		4.15	0.0		Early Mature	Structural condition Fair. Physiological condition Fair. Coppice stool - Regrown. DBH estimated, average of stems. Dimensions estimated due to inaccessibility. Emergent hedgerow tree. Location estimated, not plotted on topographical survey.	19/03/2026	35.5	3.4	10-20	C2
Tree T8	1	Sambucus nigra (Elder)	6.0	28	1		3.40		3.5		1.91		4.15	0.0		Early Mature	Structural condition Fair. Physiological condition Fair. Coppice stool - Regrown. DBH estimated, average of stems. Dimensions estimated due to inaccessibility. Emergent hedgerow tree. Location estimated, not plotted on topographical survey.	19/03/2026	35.5	3.4	10-20	C2
Group G9	1 1	Rubus fruticosus s. (Blackberry/Bramble) Crataegus monogyna (Common Hawthorn/Quick/May)	4.0	7 AVE	1	1.0		1.0		1.0		1.0		0.0		Semi Mature	Structural condition Fair. Physiological condition Fair. Dimensions estimated and averaged for the group. Scrub.	19/03/2026	2.2	0.8	10-20	C3

Stem **green** Estimated value
Stem **AVE** Average stem diameter for tree groups
Stem **COM** Combined stem diameter in accordance with BS5837
L.B. Height of lowest branch attachment (m) - where relevant

The survey information in this schedule has been gathered following a BS5837 survey for planning purposes. Where hazardous trees have been noted recommendations for works may have been made but this survey cannot be relied upon as a full health and safety assessment of the trees.

Generated By MyTREES tree management software

Tree ID	No.	Species	Height (m)	Stem diameter (cm)	No. of Stems	CROWN SPREAD (m) N	NE	E	SE	S	SW	W	NW	Crown clearance (m)	L.B. (m)	Life stage	Condition Notes	Survey date	RPA (m^2)	RPR (m)	Life expectancy (yrs)	BS Category
Tree T10	1	Sambucus nigra (Elder)	6.0	28	1		3.54		3.5		3.25		3.42	0.0		Early Mature	Structural condition Fair. Physiological condition Fair. Coppice stool - Regrown. DBH estimated, average of stems. Dimensions estimated due to inaccessibility. Emergent hedgerow tree. Location estimated, not plotted on topographical survey.	19/03/2026	35.5	3.4	10-20	C2
Tree T11	1	Sambucus nigra (Elder)	6.0	28	1		1.91		1.74		3.04		4.15	0.0		Early Mature	Structural condition Poor. Physiological condition Poor. Coppice stool - Regrown. DBH estimated, average of stems. Dimensions estimated due to inaccessibility. Emergent hedgerow tree. Location estimated, not plotted on topographical survey.	19/03/2026	35.5	3.4	0-10	C3
Tree T12	1	Corylus avellana (Common Hazel)	6.0	28	1	4.15		2.36		0.79		1.24		0.0		Early Mature	Structural condition Poor. Physiological condition Poor. Coppice stool - Regrown. DBH estimated, average of stems. Dimensions estimated due to inaccessibility. Emergent hedgerow tree. Location estimated, not plotted on topographical survey.	19/03/2026	35.5	3.4	0-10	C3
Tree T13	1	Corylus avellana (Common Hazel)	4.0	28	1		1.38		0.79		2.32		2.80	0.0		Early Mature	Structural condition Poor. Physiological condition Poor. Coppice stool - Regrown. DBH estimated, average of stems. Dimensions estimated due to inaccessibility. Emergent hedgerow tree. Location estimated, not plotted on topographical survey.	19/03/2026	35.5	3.4	0-10	C3

Stem **green** Estimated value
Stem **AVE** Average stem diameter for tree groups
Stem **COM** Combined stem diameter in accordance with BS5837
L.B. Height of lowest branch attachment (m) - where relevant

The survey information in this schedule has been gathered following a BS5837 survey for planning purposes. Where hazardous trees have been noted recommendations for works may have been made but this survey cannot be relied upon as a full health and safety assessment of the trees.

Generated By MyTREES tree management software

Tree ID	No.	Species	Height (m)	Stem diameter (cm)	No. of Stems	CROWN SPREAD (m) N	NE	E	SE	S	SW	W	NW	Crown clearance (m)	L.B. (m)	Life stage	Condition Notes	Survey date	RPA (m^2)	RPR (m)	Life expectancy (yrs)	BS Category
Tree T14	1	Corylus avellana (Common Hazel)	4.0	28	1		1.38		0.79		1.22		2.80	0.0		Early Mature	Structural condition Poor. Physiological condition Poor. Coppice stool - Regrown. DBH estimated, average of stems. Dimensions estimated due to inaccessibility. Emergent hedgerow tree. Location estimated, not plotted on topographical survey.	19/03/2026	35.5	3.4	0-10	C3
Tree T15	1	Corylus avellana (Common Hazel)	4.0	28	1		2.75		0.79		1.22		2.80	0.0		Early Mature	Structural condition Poor. Physiological condition Poor. Coppice stool - Regrown. DBH estimated, average of stems. Dimensions estimated due to inaccessibility. Emergent hedgerow tree. Location estimated, not plotted on topographical survey.	19/03/2026	35.5	3.4	0-10	C3
Group G16	1	Salix caprea (Goat Willow/Great Sallow)	5.0	9 AVE	1	1.0		1.0		1.0		1.0		0.0		Semi Mature	Structural condition Fair. Physiological condition Fair. Dimensions estimated and averaged for the group. Scrub.	19/03/2026	3.7	1.1	10-20	C2
	1	Quercus robur (English Oak)																				
	1	Crataegus monogyna (Common Hawthorn/Quick/May)																				

Stem **green** Estimated value
Stem **AVE** Average stem diameter for tree groups
Stem **COM** Combined stem diameter in accordance with BS5837
L.B. Height of lowest branch attachment (m) - where relevant

The survey information in this schedule has been gathered following a BS5837 survey for planning purposes. Where hazardous trees have been noted recommendations for works may have been made but this survey cannot be relied upon as a full health and safety assessment of the trees.

Generated By MyTREES tree management software

Tree ID	No.	Species	Height (m)	Stem diameter (cm)	No. of Stems	CROWN SPREAD (m) N	NE	E	SE	S	SW	W	NW	Crown clearance (m)	L.B. (m)	Life stage	Condition Notes	Survey date	RPA (m^2)	RPR (m)	Life expectancy (yrs)	BS Category
Group G17	1	Salix caprea (Goat Willow/Great Sallow)	8.0	18 AVE	1	2.5		2.5		2.5		2.5		0.0		Early Mature	Structural condition Fair. Physiological condition Fair. Dimensions estimated and averaged for the group. Light scrubby trees along the southern boundary with a thicker, more complex group of small trees and understorey vegetation growing along the eastern boundary with the road.	31/03/2026	14.7	2.2	10-20	C2
	1	Rubus fruticosus s. (Blackberry/Bramble)																				
	1	Prunus spinosa (Blackthorn/Sloe)																				
	1	Crataegus monogyna (Common Hawthorn/Quick/May)																				
Tree T18	1	Betula pendula (Silver Birch)	11.0	39 COM	2	5.0		5.0		5.0		5.0		1.0		Early Mature	Structural condition Fair. Physiological condition Fair. Dimensions estimated due to inaccessibility. Higher value Category C tree, has growth potential. Location estimated, not plotted on topographical survey.	19/03/2026	70.9	4.8	20-40	C1
Hedge H19	1	Rubus fruticosus s. (Blackberry/Bramble)	3.0	7 AVE	1	1.0		1.0		1.0		1.0		0.0		Semi Mature	Structural condition Fair. Physiological condition Fair. Dimensions estimated and averaged for the group. Informal gapped hedgerow.	19/03/2026	2.2	0.8	10-20	C2
	1	Crataegus monogyna (Common Hawthorn/Quick/May)																				
	1	Cornus sp. (Dogwood sp.)																				

Stem **green** Estimated value
Stem **AVE** Average stem diameter for tree groups
Stem **COM** Combined stem diameter in accordance with BS5837
L.B. Height of lowest branch attachment (m) - where relevant

The survey information in this schedule has been gathered following a BS5837 survey for planning purposes. Where hazardous trees have been noted recommendations for works may have been made but this survey cannot be relied upon as a full health and safety assessment of the trees.

Generated By MyTREES tree management software

Tree ID	No.	Species	Height (m)	Stem diameter (cm)	No. of Stems	CROWN SPREAD (m) N	NE	E	SE	S	SW	W	NW	Crown clearance (m)	L.B. (m)	Life stage	Condition Notes	Survey date	RPA (m^2)	RPR (m)	Life expectancy (yrs)	BS Category
Tree T20	1	Betula pendula (Silver Birch)	11.0	36 COM	2	4.9		4.9		4.9		4.9		1.0		Early Mature	Structural condition Fair. Physiological condition Fair. Dimensions estimated due to inaccessibility. Higher value Category C tree, has growth potential. Location estimated, not plotted on topographical survey.	19/03/2026	59.9	4.4	20-40	C1
Hedge H21	1	Laurocerasus officinalis (Cherry Laurel)	2.5	7	1	1.0		1.0		1.0		1.0		0.0		Semi Mature	Structural condition Fair. Physiological condition Fair. Dimensions estimated and averaged for the group. Hedgerow maintained.	19/03/2026	2.2	0.8	10-20	C2
Tree T22	1	Crataegus monogyna (Common Hawthorn/Quick/May)	8.0	45	1		4.95		3.7		3.7		3.7	1.0		Mature	Structural condition Fair. Physiological condition Fair. DBH estimated at base due to low crown break. Dimensions estimated due to inaccessibility. Tree located on opposite side of the drainage ditch.	19/03/2026	91.6	5.4	10-20	C1
Tree T23	1	Acer campestre (Field Maple)	6.0	19	1	2.8		2.8		2.8		2.8		1.0		Semi Mature	Structural condition Fair. Physiological condition Fair. Pollard - Regrown. DBH estimated at base due to low crown break. Location estimated, not plotted on topographical survey.	19/03/2026	16.3	2.3	10-20	C2
Tree T24	1	Salix caprea (Goat Willow/Great Sallow)	4.0	14	1		2.8		1.83		1.63		1.56	1.0		Semi Mature	Structural condition Fair. Physiological condition Poor. Pollard - Regrown. DBH estimated at base due to low crown break. Location estimated, not plotted on topographical survey.	19/03/2026	8.9	1.7	10-20	C2
Tree T25	1	Acer campestre (Field Maple)	7.0	21	1		2.27		1.52		2.8		3.62	1.0		Semi Mature	Structural condition Fair. Physiological condition Fair. Pollard - Regrown. DBH estimated at base due to low crown break.	19/03/2026	20.0	2.5	10-20	C2

Stem **green** Estimated value
Stem **AVE** Average stem diameter for tree groups
Stem **COM** Combined stem diameter in accordance with BS5837
L.B. Height of lowest branch attachment (m) - where relevant

The survey information in this schedule has been gathered following a BS5837 survey for planning purposes. Where hazardous trees have been noted recommendations for works may have been made but this survey cannot be relied upon as a full health and safety assessment of the trees.

Generated By MyTREES tree management software

Tree ID	No.	Species	Height (m)	Stem diameter (cm)	No. of Stems	CROWN SPREAD (m) N	NE	E	SE	S	SW	W	NW	Crown clearance (m)	L.B. (m)	Life stage	Condition Notes	Survey date	RPA (m^2)	RPR (m)	Life expectancy (yrs)	BS Category
Tree T26	1	Crataegus monogyna (Common Hawthorn/Quick/May)	10.0	38	1		4.0		4.0		4.0		4.94	1.0		Mature	Structural condition Fair. Physiological condition Fair. Coppice stool - Coppice origin / Mature stems. Pollard - Regrown. DBH estimated at base due to low crown break. DBH estimated, average of stems.	19/03/2026	65.3	4.6	10-20	C2
Group G27	1	Quercus ilex (Holm Oak)	3.0	7	1	1.5		1.5		1.5		1.5		0.0		Semi Mature	Structural condition Fair. Physiological condition Fair. Dimensions estimated and averaged for the group. Scrub.	19/03/2026	2.2	0.8	10-20	C2
Tree T28	1	Acer campestre (Field Maple)	6.0	24	1		2.27		1.52		2.8		3.62	1.0		Semi Mature	Structural condition Fair. Physiological condition Fair. Pollard - Regrown. DBH estimated at base due to low crown break.	19/03/2026	26.1	2.9	10-20	C2
Tree T29	1	Acer campestre (Field Maple)	8.0	28	1		2.27		3.27		4.11		2.78	3.0		Semi Mature	Structural condition Fair. Physiological condition Fair. Pollard - Regrown. DBH estimated at base due to low crown break. Tree located on opposite side of the drainage ditch.	19/03/2026	35.5	3.4	10-20	C2
Hedge H30	1 1 1	Corylus avellana (Common Hazel) Crataegus monogyna (Common Hawthorn/Quick/May) Rubus fruticosus s. (Blackberry/Bramble)	1.8	10 AVE	1	1.5		1.5		1.5		1.5		0.0		Semi Mature	Structural condition Fair. Physiological condition Fair. Dimensions estimated and averaged for the group. Hedgerow maintained.	31/03/2026	4.5	1.2	10-20	C2

Stem **green** Estimated value
Stem **AVE** Average stem diameter for tree groups
Stem **COM** Combined stem diameter in accordance with BS5837
L.B. Height of lowest branch attachment (m) - where relevant

The survey information in this schedule has been gathered following a BS5837 survey for planning purposes. Where hazardous trees have been noted recommendations for works may have been made but this survey cannot be relied upon as a full health and safety assessment of the trees.

Generated By MyTREES tree management software

Summary table with retention category

	Group	Hedgerow	Tree	Total
C1	0	0	7	7
C2	3	3	11	17
C3	1	0	5	6
Total	4	3	23	30

Summary table with life stage

	Group	Hedgerow	Tree	Total
Early Mature	1	0	11	12
Mature	0	0	6	6
Semi Mature	3	3	6	12
Total	4	3	23	30

Table 1 of BS5837 (2012) **Cascade chart for tree quality assessment**

Category and definition	Criteria (including subcategories where appropriate)			Identification on plan
Trees unsuitable for retention (see note)				
Category U Those in such a condition that they cannot realistically be retained as living trees in the context of the current land use for longer than 10 years	* Trees that have a serious, irremediable, structural defect, such that their early loss is expected due to collapse, including those that will become unviable after removal of other category U trees (e.g. where, for whatever reason, the loss of companion shelter cannot be mitigated by pruning) * Trees that are dead or are showing signs of significant, immediate, and irreversible overall decline * Trees infected with pathogens of significance to health and/or safety of other trees nearby, or very low quality trees suppressing adjacent trees of better quality NOTE Category U trees can have existing or potential conservation value which it might be desirable to preserve; see 4.5.7			**RED**
	1 Mainly arboricultural qualities	**2 Mainly landscape qualities**	**3 Mainly cultural values, including conservation**	
Trees to be considered for retention				
Category A **Trees of high quality** with an estimated remaining life expectancy of at least 40 years	Tree that are particularly good examples of their species, especially if rare or unusual; or those that are essential components of groups or formal or semi-formal arboricultural features (e.g. the dominant and/or principal trees within an avenue).	Trees, groups or woodlands of particular visual importance as arboricutural and/or landscape features.	Trees, groups or woodlands of significant conservation, historical, commemorative or other value (e.g. veteran trees or wood-pasture).	**GREEN**
Category B **Trees of moderate quality** with an estimated remaining life expectancy of at least 20 years	Trees that might be included in category A, but are downgraded because of impaired condition (e.g. presence of significant though remediable defects, including unsympathetic past management and storm damage), such that they are unlikely to be suitable for retention for beyond 40 years; or trees lacking the special quality necessary to merit the category A designation.	Trees present in numbers, usually growing as groups or woodlands, such that they attract a higher collective rating than they might as individuals; or trees occurring as collectives but situated so as to make little visual contribution to the wider locality.	Trees with material conservation or other cultural value.	**BLUE**
Category C **Trees of low quality** with an estimated remaining life expectancy of at least 10 years, or young trees with a stem diameter below 150 mm	Unremarkable trees of very limited merit or such impaired condition that they do not qualify in higher categories.	Trees present in groups or woodlands, but without this conferring on them significantly greater collective landscape value; and/or trees offering low or only temporary/transient landscape benefits.	Trees with no material conservation or other cultural value.	**GREY**

5.2 Tree Survey Key

Table 2: Tree Survey Key

Reference Code	Description
ID	Each plotted position has been allocated a sequential reference number: T1, G1, H1, W1.
Species	Listed by common name and scientific name.
Maturity	**Young** – not yet established, can be moved or replaced relatively easily and less than 1/3 of their potential mature size. **Semi-mature** – established in the landscape and approximately 1/3 of their potential mature size. **Early-mature** – approximately 2/3 of their potential mature size. **Mature** – considered to have reached mature size. **Veteran** – by recognized criteria, shows features of biological, cultural or aesthetic value that are characteristic of, but not exclusive to, individuals surviving beyond the typical age range for the species concerned. **Dead** – Dead specimen.
Height (m)	Measured in metres from ground level.
Stem Diameter (mm)	Diameter is measured at 1.5m above ground level (DBH – diameter at breast height). For multi-stemmed (M/S) trees, the diameter of each stem is measured and the squares of the stems are added together. The square root of this figure is then calculated to give the equivalent single stem diameter. In some instances, this method may provide a misleading figure (*e.g.* for coppiced trees). The diameter at ground level may be recorded instead, or a diameter that provides a more appropriate RPA.
Crown Spread (m)	The spread of the crown is measured in metres on the north, east, south and west sides. This has been recorded either with a laser or by pacing, depending upon site conditions.
Ground Cl (m)	This is the clearance of the first significant branch from ground level, measured in metres.

Reference Code	Description
Structure/form	An assessment of the form of the tree, with reference to any significant defects found (e.g. decay, weak forks, exposed roots). **Good** – No obvious major defects observed **Fair** – Minor defects present **Poor** – Major defects present
Physical condition	This refers to how well the tree is functioning as a living organism. Factors including: leaf size and condition; shoot growth; and presence of deadwood have provided an indication of its overall health. **Good** – Appears a healthy example of this species **Fair** – Early signs of stress present **Poor** – Not a healthy example of this species, with substantial signs of stress/decline evident **Dead** – No remaining contribution.
Life expectancy	The approximate remaining contribution in years has been assessed with consideration of the species and site. **<10** – less than 10 years remaining contribution **10 – 20** years remaining **20 – 40** years remaining **>40** – greater than 40 years remaining
Retention category	BS5837:2012 Table 1 categories (Annex 5.4) have been used to assess the quality and value of tree, tree groups and hedgerows. **A** – High **B** – Moderate **C** – Low **U** – In such a condition that they cannot realistically be retained as living trees in the context of the current land use for longer than 10 years.
RPA (m^2)	Root Protection Area (in m^2) calculated as a circle with a radius of 12 x the stem diameter.
RPA (m)	The radius in metres of the Root Protection Area.

5.3 Plans

5.3.1 Tree Survey Plan

5.3.2 Proposed Layout

5.3.4 Tree Protection Plan



The original of this drawing was produced in colour -a monochrome copy should not be relied upon.

BS 5837:2012 TREE RETENTION CATEGORIES

Category A
Trees of high quality with an estimated remaining life expectancy of at least 40 years.

Category B
Trees of moderate quality with an estimated remaining life expectancy of at least 20 years.

Category C
Trees of low quality with an estimated remaining life expectancy of at least 10 years or young trees with a stem diameter below 150mm.

Category U
Those in such a condition that the tree cannot realistically be retained as living trees in the context of the current land use for longer that 10 years.

BS5837 Root Protection Areas
Precautionary areas within which tree roots and soil structure must be protected. All works within these areas will require special methods of work.

REV	DATE	DESCRIPTION	DRAWN
-	xx.xx.xx	-	xx
Base Drawing			
-	-	-	

Title
Tree Survey

Client
HADSCAL

Project
HADSCAL Land, Hay-on-Wye, HR3 5DY.

Date	Drawn by	Checked by
March 2026	EC	-

Drawing No	Rev	Scale
3528-P-10	-	1:1000 A3

focus
ENVIRONMENTAL CONSULTANTS



The original of this drawing was produced in colour -a monochrome copy should not be relied upon.

BS 5837:2012 TREE RETENTION CATEGORIES

Category A
Trees of high quality with an estimated remaining life expectancy of at least 40 years.

Category B
Trees of moderate quality with an estimated remaining life expectancy of at least 20 years.

Category C
Trees of low quality with an estimated remaining life expectancy of at least 10 years or young trees with a stem diameter below 150mm.

Category U
Those in such a condition that the tree cannot realistically be retained as living trees in the context of the current land use for longer that 10 years.

BS5837 Root Protection Areas
Precautionary areas within which tree roots and soil structure must be protected. All works within these areas will require special methods of work.

Trees to be removed shown shaded

-

REV	DATE	DESCRIPTION	DRAWN
-	xx.xx.xx	-	xx
Base Drawing			
	-	-	

Title
Proposed Layout and Tree Removals

Client
HADSCAL

Project
HADSCAL Land, Hay-on-Wye, HR3 5DY.

Date	Drawn by	Checked by
October 2026	EC	-
Drawing No	**Rev**	**Scale**
3528-P-11	-	1:1000 A3

focus
ENVIRONMENTAL CONSULTANTS

ARBORICULTURAL METHOD STATEMENT

TREE WORKS

Only the tree works specified within this report may be undertaken, after the appropriate planning consents have been acquired and in order to implement the consent. In the event of any uncertainty regarding tree works, the retained arboricultural consultant will be consulted and where appropriate the Local Planning Authority.

All tree works will be undertaken, in accordance with the best-practice recommendations provided in BS 3998:2010. The statutory responsibilities as outlined in the Wildlife and Countryside Act 1981 (as amended) and the Habitat Regulations 2010 will also be complied with.

TREE PROTECTION FENCING

The tree protection fencing and (where appropriate) ground protection, will be installed as specified within this plan, prior to the commencement of any demolition and construction works. No plant or materials will be delivered to site prior to the construction of the tree protective fencing other than those required to install the tree protection fencing. On every third panel, a sign will be fixed that states "*Tree Protection Zone (TPZ). Keep out. Any incursion into this area must be agreed in advance with the retained arboricultural consultant and Local Planning Authority*." An example of this sign is provided within this plan.

The position of the tree protection fencing must not be amended and no individual panels will be uncoupled, without the agreement of the retained arboricultural consultant and/or Local Planning Authority.

SERVICES AND DRAINAGE

The installation of drainage runs, manholes, storage tanks, and utilities will be positioned outside the root protection areas of retained trees. If the installation of new services and drainage runs are required within the root protection areas (RPAs) of retained trees, all methods of working will follow the guidance within Table 3 of BS 5837 or the National Joint Utilities Group's (NJUG) Guidelines for the planning, installation and maintenance of utility apparatus in proximity to trees (volume 4, issue 2).

Excavation works within the RPAs of retained trees will be undertaken manually with the use of hand tools only (under the supervision of the retained arboricultural consultant), unless otherwise agreed in advance by the retained arboricultural consultant. It is recommended that an air lance - and if required a soil vacuum - is used, to excavate service trenches within RPAs. If soil conditions are not suitable for this method of excavation, alternative hand tools can be used once agreed in advance by the retained arboricultural consultant.

All roots greater than 25mm in diameter will be retained and will immediately be wrapped in hessian or another appropriate material, to prevent desiccation and temperature fluctuations. Roots will be pushed aside to allow for runs to be installed, where this is practical and without causing root damage.

No machinery will be permitted within the TPZ, at any time, unless agreed in advance with the retained arboricultural consultant.

NO-DIG CONSTRUCTION AREAS

Areas that will require no-dig methods of construction are shown within this plan. Working methods within these areas will comply with the details outlined in the main report and in advance of works being undertaken will be agreed with the retained arboricultural consultant.

ARBORICULTURAL CLERK OF WORKS

The monitoring of activities at the Site will occur, at the following points:

- To sign-off the tree protection measures;
- To sign-off the tree works;
- At other points as specified within this Report and the TPP.

It will be the responsibility of the main contractor (or other managing individual or organisation) to confirm the date and time of attendance, providing at least five working days of notice so that the project arboriculturist can confirm attendance.

GENERAL PROTECTION METHODS

No fires will be permitted, within 20m of the crown of any tree or other area of vegetation that includes hedgerows and groups of trees.

No changes in soil level will occur, within the TPZs and RPAs, without agreement in advance with the retained arboricultural consultant.

The TPZs will at all times remain free of liquids, materials, vehicles, plant, and personnel, without agreement in advance with the retained arboricultural consultant.

Any liquid materials spilled on site will immediately be cleared up. If liquids are spilled within 2m of any TPZ or RPA, the incident will immediately be reported to the retained arboricultural consultant, to determine the appropriate response.

All damage to trees and other vegetation will immediately be reported to the retained arboricultural consultant, to determine the appropriate response.

Figure 3 Examples of above-grounds stabilizing systems

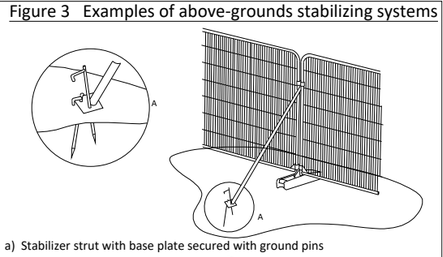

a) Stabilizer strut with base plate secured with ground pins

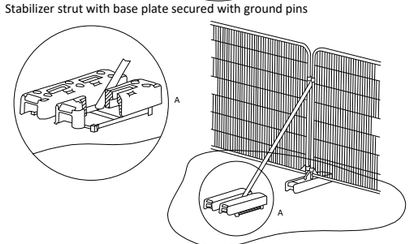

b) Stabilizer strut mounted on block tray



N

The original of this drawing was produced in colour -a monochrome copy should not be relied upon.

BS 5837:2012 TREE RETENTION CATEGORIES

Category A
Trees of high quality with an estimated remaining life expectancy of at least 40 years.

Category B
Trees of moderate quality with an estimated remaining life expectancy of at least 20 years.

Category C
Trees of low quality with an estimated remaining life expectancy of at least 10 years or young trees with a stem diameter below 150mm.

Category U
Those in such a condition that the tree cannot realistically be retained as living trees in the context of the current land use for longer that 10 years.

BS5837 Root Protection Areas
Precautionary areas within which tree roots and soil structure must be protected. All works within these areas will require special methods of work.

Position of protective fencing and tree protection zones during construction. Position may be amended for landscaping.

Location of ground mats during construction to allow working room and pedestrian access round the proposed building.

REV	DATE	DESCRIPTION	DRAWN
-	xx.xx.xx	-	xx

Base Drawing

-	-	-

Title
Tree Protection Plan

Client
HADSCAL

Project
HADSCAL Land, Hay-on-Wye, HR3 5DY.

Date	Drawn by	Checked by
October 2026	EC	-
Drawing No	**Rev**	**Scale**
3528-P-12	-	1:1000 A3

focus
ENVIRONMENTAL CONSULTANTS

5.4 BS5837:2012 Cascade Chart for Tree Quality Assessment

Table 1 Cascade chart for tree quality assessment

Category and definition	**Criteria (including subcategories where appropriate)**			**Identification on plan**
Tree unsuitable for retention (see Note)				
Category U Those in a such condition that they cannot realistically be retained as living trees in the context of the current land us for longer than 10 years	• Trees that have a serious, irremediable, structural defect, such that their early loss is expected due to collapse, including those that will become unviable after removal of other category U trees (*e.g.* where, for whatever reason, the loss of companion shelter cannot be mitigated by pruning) • Trees that are dead or are showing signs of significant, immediate, and irreversible overall decline • Trees infected with pathogens of significance to the health and/or safety of other trees nearby, or very low quality trees suppressing adjacent trees of better quality *NOTE: Category U trees can have existing or potential conservation value which might be desirable to preserve; see 4.5.7.*			See Table 2
	1 Mainly Arboricultural qualities	***2 Mainly landscape qualities***	***3 Mainly cultural values, including conservation***	**Identification on plan**
Trees to be considered for retention				
Category A **Trees of high quality** with an estimated remaining life expectancy of at least 40 years	Trees that are particularly good examples of their species, especially if rare or unusual; or those that are essential components of groups or formal or semi-formal arboricultural features (*e.g.* the dominant and/or principal trees with an avenue)	Trees, groups or woodlands of particular visual importance as arboricultural and/or landscape features	Trees, groups or woodlands of significant conservation, historical, commemorative or other value (*e.g.* veteran trees or wood-pasture)	See Table 2
Category B **Trees of moderate quality** with an estimated remaining life expectancy of at least 20 years	Trees that might be included in category A, but are downgraded because of impaired condition (*e.g.* presence of significant though remediable defects, including unsympathetic past management and storm damage), such that they are unlikely to be suitable for retention for beyond 40 years; or trees lacking the special quality necessary to merit the category A designation	Trees present in numbers, usually growing as groups or woodlands, such that they attach a higher collective rating than they might as individuals: or trees occurring as collectives but situated so as to make little visual contribution to the wider locality	Trees with material conservation or other cultural value	See Table 2
Category C **Trees of low quality** with an estimated remaining life expectancy of at least 10 years, or young trees with a stem diameter below 150mm	Unremarkable trees of very limited merit or such impaired condition that they do not qualify in higher categories	Trees present in groups or woodlands, but without this conferring on them scientifically greater collective landscape value; and/or trees offering low or only temporary/transient landscape benefits	Trees with no material conservation or other cultural value	See Table 2

5.5 Tree Protection Measures & Signage

5.5.1 Default Tree Protection Fencing Design

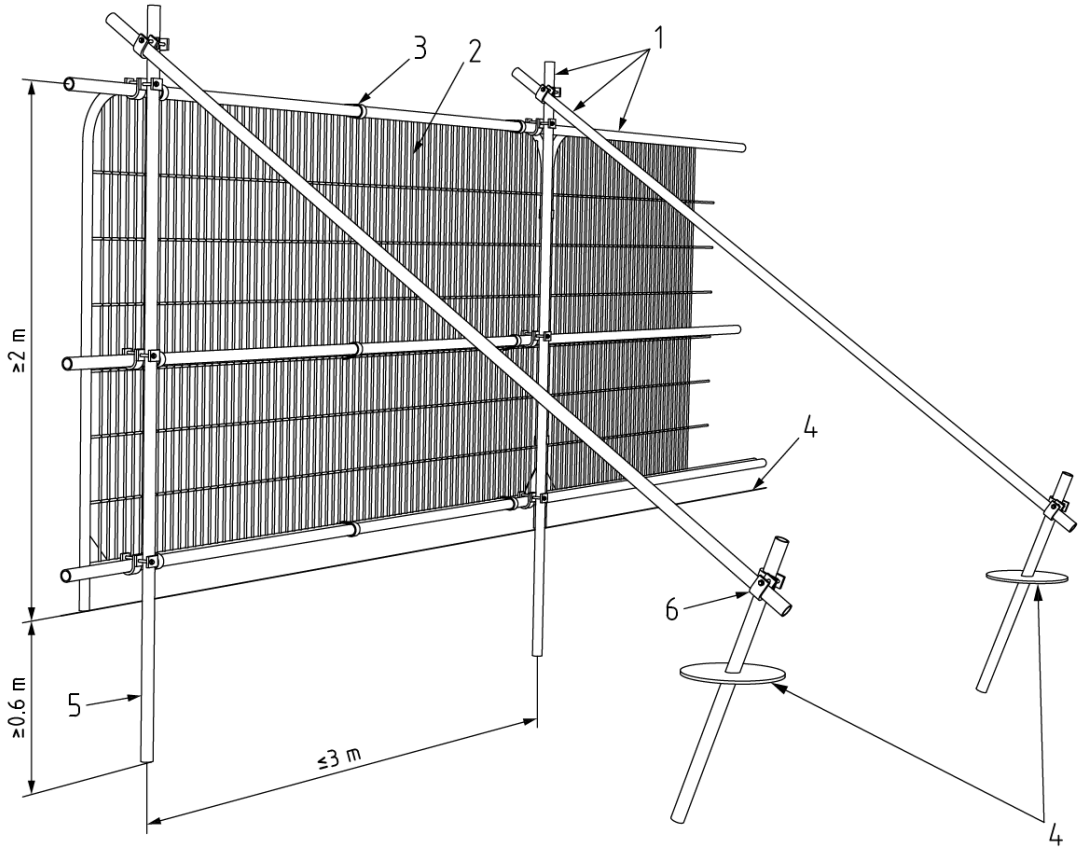

Key

1 Standard scaffold poles
2 Heavy gauge 2 m tall galvanized tube and welded mesh infill panels
3 Panels secured to uprights and cross-members with wire ties
4 Ground level
5 Uprights driven into the ground until secure (minimum depth 0.6 m)
6 Standard scaffold clamps

5.5.2 Alternative Tree Protection Fencing Design

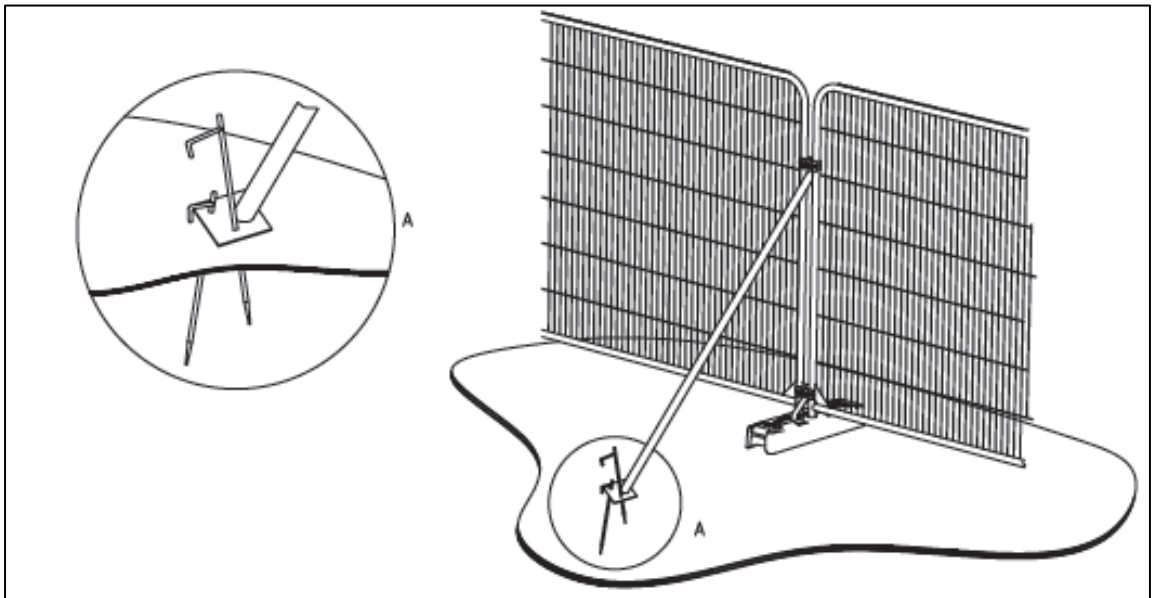

a) Stabilizer strut with base plate secured with ground pins

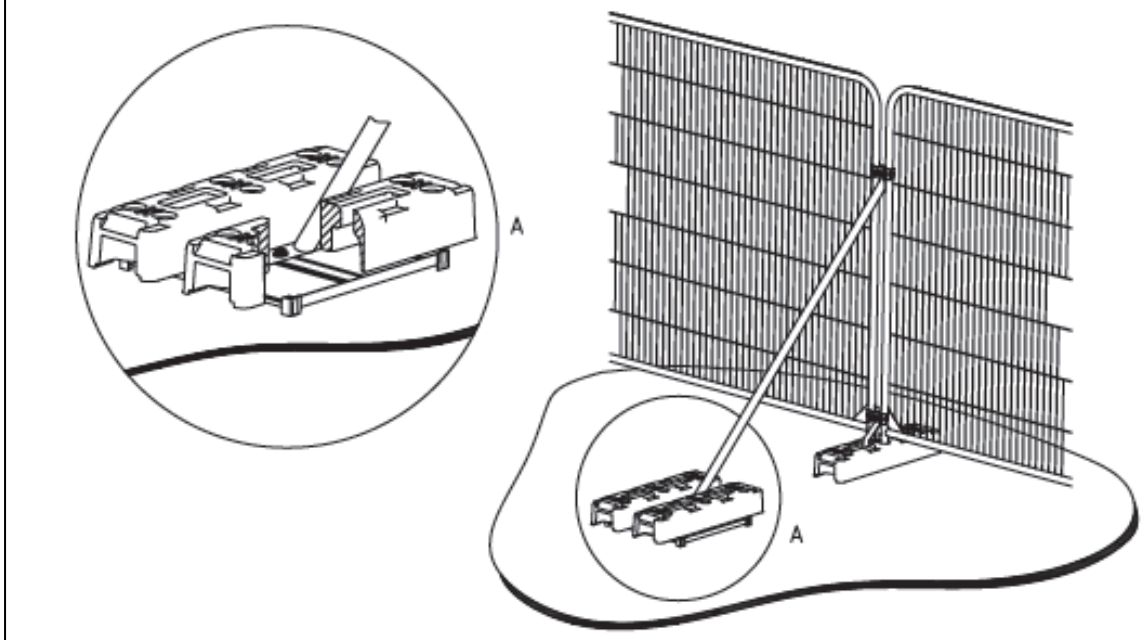

b) Stabilizer strut mounted on block tray

5.5.3 Signage for Tree Protection Fencing





5.6 Scope & Limitations

The scope of this report is as follows:

- To undertake a BS5837: 2012 survey of trees and hedgerows within the site identified by the client as being subject to future development proposals.

- To provide a Tree Constraints Plan (See Annex 5.3) for the site, provided without reference to a detailed development design in order to inform and optimise future development proposals.

- To undertake a BS5837:2012 arboricultural impact assessment of trees and hedgerows within the area identified by the client as being potentially affected by future development proposals.

- To provide a series of tree impact plans for the site, which are provided with reference to a detailed development design in order to inform a planning application for this site.

This report is valid for a period of not more than 12 months from the date of the inspection or less in the event of significant changes to the condition of trees present on site (*e.g.* following major storm damage, fire or disease) or prevailing site conditions.

No detailed assessment has been undertaken as part of this report with regard to managing the trees in relation to their risk of failure (either parts of the trees or the entire trees).

Trees and hedgerows can support a variety of vertebrate and invertebrate fauna, including species that are afforded protection under wildlife legislation (*e.g.* The Wildlife and Countryside Act 1981 (as amended), The Conservation of Habitats and Species Regulations (2017).

Where the presence of legally protected species is known or suspected, advice should always be sought from an experienced ecological consultant and/or the relevant statutory nature conservation organisation (*e.g.* Natural England) for formal advice. Such detailed advice is beyond the remit of this report, but obvious wildlife constraints will be identified wherever feasible.

The author has relied on the accuracy of the drawings provided in the production of this report.

5.7 Survey Methods

The tree survey was carried out according to the methods set out in British Standard 5837:2012.

The survey was carried out from ground level. Binoculars were used where required. Measurements were taken with the use of electronic measuring equipment and measuring tapes. Crown spread dimensions were measured either with a laser or by pacing. Where measurements have been estimated, (*e.g*. for neighbouring trees), this will be indicated in the survey (#).

The survey was carried out at the site address or from public places, with no access to neighbouring properties.

The tree, group, hedgerow positions are those shown on the topographical survey provided. Positions have only been amended where obvious inaccuracies have arisen. Trees have been recorded as groups where they form cohesive features either aerodynamically, visually or culturally. Sequential reference ID numbers are given for plotted positions as described in Table 5, below:

Table 5: Summary of Reference Identification Codes.

Reference Code	Description
T1, T2, T3 *etc*.	Individual trees
G1, G2, G3	Tree groups
W1, W2, W3	Woodlands
H1, H2, H3	Hedgerows

The stem diameter measurements were recorded at 1.5m above ground level. For stems growing on slopes, multi-stems and stems with unusual growth patterns the BS5827:2012 guidance was followed (Annex C). Trees with a diameter of less than 75mm were not recorded for this survey as they are likely to be replaceable or can be relocated.

5.8 Legislation, Planning Policy and Guidance

This report is principally designed to satisfy the requirements of BS5837:2012 - *Trees in Relation to Design, Demolition and Construction*.

The information and advice contained within this report will facilitate the correct application of The Town and Country Planning Act 1990 (specifically Part VIII 'Special Controls', Chapter 1 'Trees' S.197 and sequential).

Advice contained within this report is designed to address local plan policies in relation to trees in the planning process.

This advice contained within this report is also designed to address the requirements of the updated National Planning Policy Framework (NPPF) 2024. The NPPF sets out the government's planning policies for England and how these are expected to be applied. This framework acts as guidance for planning authorities (LPAs) in England to form Local Plan policies in favour of sustainable development as part of the government's reforms to increase the accessibility of the planning system and promote long term sustainable growth. Along with the Circular 06/205, the NPPF consolidates the Planning Policy Statements and Guidance Notes, many of which are now obsolete, including *Planning Policy Statement 9: Biodiversity and Geological Conservation (PPS9)*.

Chapter 15 of the framework focusses on habitats and biodiversity. Specifically, paragraph 193 states:
"…*when determining planning applications, local planning authorities should apply the following principles*:

- *if significant harm to biodiversity resulting from a development cannot be avoided (through locating on an alternative site with less harmful impacts), adequately mitigated, or, as a last resort, compensated for, then planning permission should be refused*;

- *development on land within or outside a Site of Special Scientific Interest, and which is likely to have an adverse effect on it (either individually or in combination with other developments) should not normally be permitted. The only exception is where the benefits of the development in the location proposed clearly outweigh both its likely*

impact on the features of the site that make it of special scientific interest, and any broader impacts on the national network of Sites of Special Scientific Interest;

- *development resulting in the loss or deterioration of irreplaceable habitats (such as ancient woodland and ancient or veteran trees) should be refused, unless there are wholly exceptional reasons and a suitable compensation strategy exists*;

- *development proposals whose primary objective is to conserve or enhance biodiversity should be supported; while opportunities to improve biodiversity in and around developments should be integrated as part of their design, especially where this can secure measurable net gains for biodiversity or enhance public access to nature where this is appropriate.*

5.9 References & Bibliography

British Standards Institute (2010). *British Standard 3998:2010 Tree Work – Recommendations.* BSI, London UK.

British Standards Institute (2012). *British Standard 5837: 2012 Trees in Relation to Design, Demolition and Construction – Recommendations*. BSI, London UK.

British Standards Institute (2014). *British Standard 8545: 2014 Trees: from nursery to independence in the landscape – Recommendations*. BSI, London UK.

Geology of Britain Viewer: http://mapapps.bgs.ac.uk/geologyofbritain3d/index.html? [accessed – ## Month year].

NHBC Standards (**2019).** *Chapter 4.2 Building near Trees*. NHBC, Milton Keynes UK. (https://nhbc-standards.co.uk/).

NJUG (2007). *NJUG Guidelines for the Planning, Installation and Maintenance of Utility Apparatus in Proximity to Trees.* Volume 4, Issue 2. National Joint Utilities Group.

6. QUALIFICATIONS & EXPERIENCE

Focus Environmental Consultants® has the expertise to provide sure-fire environmental solutions to a wide range of projects. The company ethos forges the highest standards of professional scientific practice with a best value approach for our clients. Our core area of expertise is in the production of specialist environmental reports and advice to support planning applications. Our comprehensive services include tree constraints surveys, Arboricultural Impact Assessments (AIA) and Method Statements, Health and Safety tree assessments, reports to accompany insurance/mortgage applications and production of Woodland Management Plans. The arboricultural team at Focus Environmental Consultants are all members of the Arboricultural Association and Institute of Chartered Foresters. Our flexible approach, range of skills and broad project experience from major infrastructure contracts to small private developments allows us to adapt to your individual requirements. As well as offering a full suite of arboricultural services, Focus Environmental Consultants is able to provide expert ecological advice and reports and is building an enviable reputation for innovative habitat creation and management solutions. Focus Environmental Consultants is situated in Worcestershire, providing a convenient and central UK location.

Edward Cleverdon BSc (Hons) MArborA

This report has been prepared by Edward Cleverdon. Edward is a senior arboricultural consultant dealing with trees in relation to all forms of human activity including the built environment. Edward is a professional member of the Arboricultural Association, an associate member of the Institute of Chartered Foresters, graduated with a BSc (hons) degree in Arboriculture from The University of Central Lancashire, is a LANTRA qualified professional tree inspector; and a registered user of Quantified Tree Risk Assessment.

This report has been checked for quality and content by:

Fern Fellowes-Day BSc (Hons) MSc MCIEEM MRSB

Fern has over twenty years of professional experience in the ecological consultancy field. She holds BSc (Hons) in Zoology from the University of Wales, Aberystwyth and MSc in Habitat Creation and Management from Staffordshire University. Fern has considerable experience in conducting Preliminary Ecological Appraisals, Ecological Impact Assessments (EcIA) and Habitat Regulations Assessments (HRA). Fern's particular expertise is with protected species surveys. As a Registered User of the CL35 Badger Class Licence she has extensive knowledge in dealing with the badgers, with practical experience in artificial sett design and creation and has held numerous Natural England licences to close or disturb badger setts. In addition, Fern holds survey licences for great crested newts, bats and white-clawed crayfish. Fern has held Natural England Mitigation (development) licences for great crested newts (including being a Registered Consultant for the great crested newt Low Impact Class Licence (GCN LICL)) and Conservation licences for white-clawed crayfish. She is particularly experienced in dealing with newt issues affecting the quarrying, mineral extraction and landfill industry.